Biofpr Biofuels Bioproducts & Biorefining

Conversion of biomass to sugars via ionic liquid hydrolysis: process synthesis and economic evaluation

S. Murat Sen, University of Wisconsin-Madison, WI, USA
Joseph B. Binder, University of California, Berkeley, CA, USA
Ronald T. Raines and Christos T. Maravelias, University of Wisconsin-Madison, WI, USA

Received November 9, 2011; revised January 23, 2012; accepted January 24, 2012
View online May 10, 2012 at Wiley Online Library (wileyonlinelibrary.com); DOI: 10.1002/bbb.1336;
***Biofuels, Bioprod. Bioref.* 6:444–452 (2012)**

Abstract: Replacement of fossil fuels with new sustainable resources is becoming crucial due to depleting petroleum reserves, increasing global energy demand, and arising environmental concerns. Lignocellulosic biomass can be an alternative to fossil resources as a sustainable and environmentally friendly feedstock for producing chemicals and fuels. One of the major challenges of biomass-based technologies is to extract sugars that are covalently trapped inside the lignocellulosic biomass efficiently. Recently, ionic liquids (ILs) have been recognized as promising solvents for mild and rapid hydrolysis of biomass feedstocks with higher sugar yields. In this study, we first develop and then evaluate an IL-based biomass hydrolysis strategy for large-scale production of fermentable sugars from corn stover. Toward this aim, we develop a process simulation model based on the experimental studies reported by Binder and Raines (*P Natl Acad Sci USA* 107: 4516–4521(2010)) and a simulated-moving-bed (SMB) system. We identify that the major cost driver is the IL cost. Our analysis suggests that process alternatives with lower IL consumption and/or separation strategies that would allow higher recycle of ILs should be studied. © 2012 Society of Chemical Industry and John Wiley & Sons, Ltd

Keywords: biofuels; ionic liquids; chemical process design; technoeconomic evaluation

Introduction

The need for alternative sources of fuel and energy has been growing due to depleting petroleum reserves and increasing global energy consumption.[1–3] Besides the availability of fossil fuels, the use of these sources is also in question since they result in extensive greenhouse gas (GHG) emissions.[4] Lignocellulosic biomass is a widely abundant and potentially carbon-neutral source of energy which can be used for the production of liquid fuels.[5,6]

Correspondence to: Christos T. Maravelias, Department of Chemical and Biological Engineering, University of Wisconsin-Madison, Chemical and Biological Engineering, 1415 Engineering Dr., Madison, WI 53706, USA. E-mail: maravelias@wisc.edu

 © 2012 Society of Chemical Industry and John Wiley & Sons, Ltd

Lignocellulose has evolved to resist degradation due to the crystallinity of cellulose and the presence of covalent crosslinking between the lignin and hemicelluloses via ester and ether linkages in the plant cell wall.[7] To extract the fermentable sugars that are trapped inside the lignocellulose, cellulose and hemicellulose should be freed from the lignin, and then hydrolyzed to break them down into monosaccharides.[8] The efficient conversion of carbohydrates in lignocellulosic biomass into sugars is a challenging technical bottleneck for economical biofuel production. Though hemicellulose hydrolyzes readily, to make cellulose susceptible to hydrolysis, a pre-treatment process is needed to remove lignin, reduce cellulose crystallinity, and increase the cellulose porosity.[9,10] The most common pre-treatment methods are dilute acid,[11–13] lime,[14–16] hot water[17–19] and ammonia fiber expansion.[20–22]

Recently, ionic liquids (ILs) have demonstrated great promise for pre-treatment of cellulosic biomass.[23–26] ILs are organic salts that are in liquid state at room temperature.[27] With their low volatility at ambient temperatures and unique solvent properties, ILs have been recognized as efficient solvents that are also potentially 'green' due to their minimal vapor pressure.[28,29] Pre-treatment of lignocellulosic biomass using ILs can effectively remove the lignin and reduce the crystallinity of the cellulose to permit enzymatic hydrolysis at high solid loadings and low enzyme concentrations; hence it significantly accelerates the rate of enzymatic hydrolysis and increases the yield of the fermentable sugars.[30,31] IL pre-treatment also can potentially lower energy consumption, since it can be carried out under relatively mild thermal conditions.[32] This lessens the thermal degradation of cellulose and hemicellulose into products which could inhibit the downstream saccharification and fermentation step.[33,34] The delignification efficiency of IL pre-treatment also suggests a promising means for recovering lignin as a valuable commercial co-product.[35] Nevertheless, a potential shortcoming of IL pre-treatment is the high cost of ILs.[36]

Accordingly, the goal of this study is to investigate the technoeconomic feasibility of a large-scale process for fermentable sugar production from IL pre-treated biomass. While the particular process embodiment considered herein is based on the technology developed by Binder and Raines,[37] our analysis is general because it investigates wide ranges of the key technical and economic factors. The IL hydrolysis and simulated moving bed (SMB) separation technologies we employ are reviewed in the next section. We then present our baseline technoeconomic evaluation, while sensitivity analysis results are given before we briefly discuss alternative configurations that can potentially improve the economics.

Technology overview

The strategy we investigate is based on a series of two hydrolyses of crude biomass at relatively low temperature (105°C) using [EMIM]Cl.[37,38] The IL:biomass ratio in the hydrolysis reactors is maintained at 10:1. This ratio seems to be appropriate since there is evidence that cellulose conversion decreases at a lower [EMIM]Cl loading (18 wt% biomass in [EMIM]Cl).[39] In this process, 20 wt% HCl loading relative to stover weight is supplied into each reactor. The water content of the reaction mixture has a considerable influence on the conversion and product distribution.[27,40] When there is not enough water in the reaction medium, dehydration of monosaccharides to hydroxymethylfurfural (HMF) or furfural is favored and is likely to provide the main water source for additional hydrolysis.[41,42] In contrast, when the water content exceeds a certain level, polymeric carbohydrates are no longer soluble in ionic liquids.[23] Therefore, concentration of water should be optimized. Binder and Raines[37] balanced cellulose solubility and glucose stability by adding water gradually during hydrolysis, since cellulose solubility would increase as the reaction progresses. Water feed to total reaction mixture ratio is increased to 43 wt% in each reactor within an hour. After successive hydrolysis steps, glucose yield of 78 wt% can be obtained from cellulose, while the total biomass-to-sugars yield is 54 wt%.

As mentioned before, the high cost of ILs can be a potential drawback. Therefore, ILs should be recovered from the hydrolyzate efficiently using a cost-effective separation technology. Preliminary calculations show that at least 98% of the ILs should be recovered for an economically feasible process.[37] Extraction seems to be challenging because fermentable sugars and [EMIM]Cl have similar solubilities in various solvents.[43] Additionally, these compounds have very low volatilities; thus distillation is not an appropriate choice. It is also known that thermal degradation of sugars begins at 160°C, while [EMIM]Cl thermally decomposes at 190°C when heated.[44] Therefore, thermal stability of

© 2012 Society of Chemical Industry and John Wiley & Sons, Ltd

these components is another obstacle for high temperature distillation. In contrast, chromatographic separation methods have been reported to be practical to achieve the desired product purity. SMB chromatography is a continuous adsorption technique, which utilizes a series of columns with periodically moving inner and outer ports. In an SMB system, the fast-migrating solutes are collected from the raffinate port, while slow-migrating solutes are withdrawn from the extract port. Wooley *et al.*[45] developed a nine-zone SMB system which consists of two rings and recovers glucose and xylose from biomass hydrolyzate with 88% recovery and near 100% purity as depicted in Fig. 1. In the first ring, sulfuric acid (a fast-moving solute) is recovered as the raffinate product (raffinate 1) and acetic acid (a slow-moving solute) is partially recovered as the extract product (extract 1), while a mixture of the two sugars (intermediate solute) and the rest of the acetic acid is recovered in a bypass stream. Most of the water can be taken out from eluant 1 to reduce the dilution of the bypass. The bypass stream of the first ring is input as the feed of the second ring, in which the sugars are recovered as the raffinate product (raffinate 2) and acetic acid is recovered as the extract product (extract 2).

Similarly, Xie *et al.*[46] used a five-zone SMB system for the isolation of six sugars (arabinose, mannose, xylose, galactose, glucose, cellobiose) from biomass hydrolyzate containing impurities such as sulfuric acid, acetic acid, furfural, and HMF. Although these studies investigated sugar recovery from the hydrolyzate mixture in the absence of ILs, it is anticipated that ILs can be isolated from the biomass hydrolyzate by this method easily because of their charged structure.[47] It should be noted that Binder and Raines[37] reported >95% recovery of the IL for a corn stover hydrolyzate stream passing through a column of [EMIM]-exchanged Dowex® 50 resin. In this study, we assumed 98% recovery of the IL at our baseline design.

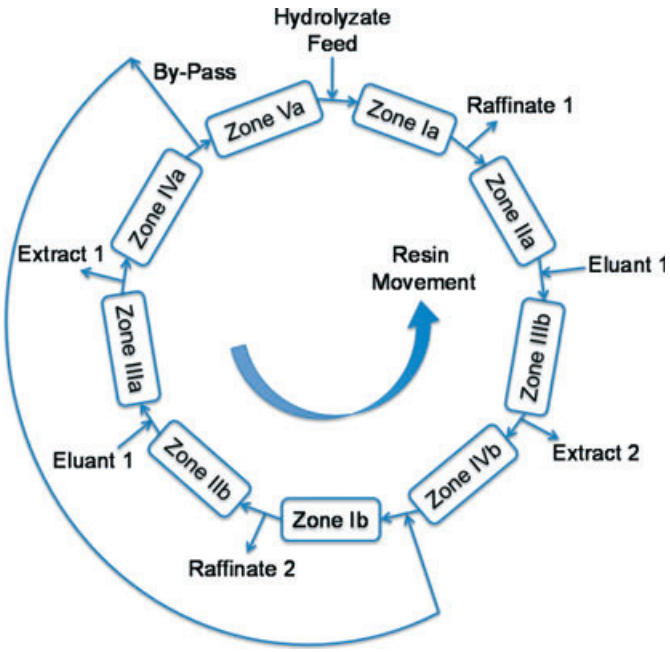

Figure 1. Schematic representation of a nine-zone SMB system (adapted from Wooley *et al.*[45]).

Process synthesis

We synthesized an integrated strategy for the production of sugars from corn stover; the process flow diagram (PFD) is shown in Fig. 2. Our strategy employs four types of systems: (i) IL-based hydrolysis, (ii) liquid-solid separations, (iii) boiler/turbogenerator, and (iv) SMB separations. The modeling of the first is based on experimental data for a series of two IL hydrolyses to produce fermentable sugars from crude biomass.[37,38] The modeling of the second and third, which are established industrial unit operations, is based on data from the literature (NREL report).[48] The modeling of the fourth system, the SMB-based separation of IL from fermentable sugars and water, was based on a literature search for similar systems. We assumed that fresh IL ([EMIM]Cl) feed mixed with the IL recycle stream is supplied into the two hydrolysis reactors according to the experimentally obtained ratio. The first step of the process is decrystallization of corn stover feed (stream 1) through mixing with ILs (stream 3). The outlet stream of the decrystallization unit containing pre-treated corn stover (stream 4) is hydrolyzed in the first hydrolysis reactor by addition of 20 wt% HCl and water (streams 5 and 6, respectively). After the hydrolysis step, 97% of the soluble products are separated from the residual lignin and cellulose solids and sent to the SMB chromatographic separation system (stream 8), while the residual lignin and cellulose solids with 50 wt% moisture content (stream 9) are subjected to a second hydrolysis. After similar decrystallization and hydrolysis steps, soluble products and [EMIM]Cl in the solid residues are recovered using a pressure filter assuming that 96% cake washing efficiency is possible in two wash cycles with a wash water to feed mass ratio of 0.58 as described in the NREL

 © 2012 Society of Chemical Industry and John Wiley & Sons, Ltd | *Biofuels, Bioprod. Bioref.* **6**:444–452 (2012); DOI: 10.1002/bbb

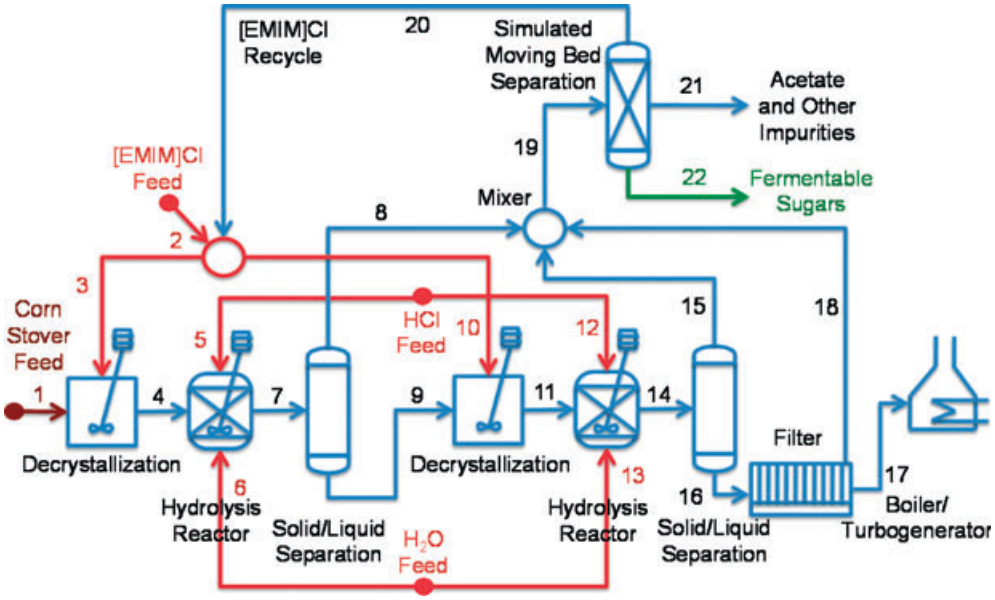

Figure 2. Process flow diagram of fermentable sugar production using ionic liquids (ILs).

report.[48] Following the pressure filtration, the remaining solid residues in stream 17 are sent to a boiler/turbogenerator to produce heat and electricity. The soluble product streams of the second hydrolysis step (streams 15 and 18) are mixed with that of the first hydrolysis step (stream 8) and sent to the SMB system.

In the SMB system, 98% recovery of the IL is assumed from the biomass hydrolyzate containing [EMIM]Cl and fermentable sugars (glucose, xylose, arabinose, mannose, and galactose) as well as HCl, water, extractives, acetic acid and other soluble by-products. Recovered IL in stream 20 is mixed with fresh IL and recycled back to the two hydrolysis reactors. Stream 21 contains 90% of the acetates present in the biomass and other impurities. Almost 100% of the fermentable sugars in the biomass hydrolyzate are obtained in stream 22. The overall conversion of biomass feedstock to fermentable sugars is found to be 54 wt%.

The net energy efficiency of the process, which is the ratio of the total energy output over the total energy input, is 66.6%. The only input comes from biomass (50.3 MW), while the output includes fermentable sugars (23.5 MW), excess electricity (5.2 MW), and excess heat (4.8 MW). 47% of the total biomass energy content is present in the sugar product. The energy content of corn stover and the sugar products were calculated using heat of combustion data.[49] The insoluble portion of biomass (lignin, non-fermentable, and unconverted polysaccharides), which contains 43% (21.5 MW) of the total biomass energy content, is sent to the turbogenerator where it is converted, using a combined heat and power cycle, into 6.4 MW of electricity (30% efficiency) and 8.6 MW of heat (40% efficiency). The required amounts of process heat, which after heat integration was calculated to be equal to 3.8 MW, and process electricity, which is equal to 1.2 MW, are fully satisfied. The excess electricity (5.2 MW) is sold to the grid, while the excess heat (4.8 MW) is assumed to be used in other processes that are likely to be integrated (e.g. ethanol-water distillation in a lignocellulosic ethanol plant). A schematic of the major energy flows is shown in Fig. 3.

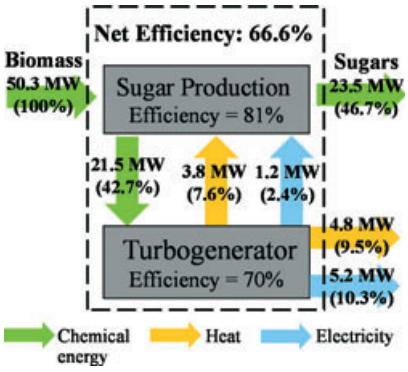

Figure 3. Net energy efficiency of IL-based hydrolysis process.

Technoeconomic evaluation

The basis of our analysis is a facility converting 80 000 tons/ yr (10 tons/hr) of dry biomass into 43 200 tons/yr of fermentable sugars. We selected a relatively small capacity because the total capital investment can be the major barrier for the implementation of this type of technology. Thus, the unit production cost can be substantially reduced due to economies of scale if a larger-scale facility is installed. After two IL hydrolysis steps, the overall glucose yield from cellulose and xylose yield from xylan are 78 and 90 wt%, respectively. We assume that the IL recovery using the SMB separation system is 98%. Decrystallization and reactor units are designed based on a residence time equal to 2.5 h for the first hydrolysis and 3 h for the second hydrolysis. The standard power law expression[50] is used to estimate equipment costs (except for the SMB system),

$$C_e = CS^n \tag{1}$$

where C_e is the purchased equipment cost, S is the characteristic size parameter, C is the cost constant based on mid2004 dollars, and n is the corresponding exponent for each type of equipment. The turbogenerator and pressure filter costs are calculated from the estimated power capacity based on the results presented in the NREL report using a similar power law approach.[48] Equipment cost of the SMB system is calculated using the correlation given in Xie *et al.*[46] All equipment costs are updated to their current values using the 2011 chemical engineering plant cost index.[51] The cost of ILs ([EMIM]Cl) is assumed to be $10/kg projecting that mass production will reduce their price.

The calculated equipment costs are given in Table 1. The cost of the SMB separation system is the dominant capital cost component ($37 million), accounting for more than 60% of the total equipment cost, followed by the cost of the turbogenerator ($15.9 million). The total purchased equipment cost is equal to $60.3 million. The total project investment was estimated at $193 million, which includes other direct (e.g. instrumentation, insulation) and indirect (e.g. engineering, contingency) costs. We note that 403 tons of ILs should be purchased before the start-up of the operation to fill the two hydrolysis reactors, which results in $4 million of capital requirement (working capital).

Table 1. Purchased equipment costs (capacity: 80 000 dry tons of biomass per year).

Equipment units	Cost ($)
SMB system	36 978 000
Turbogenerator	15 863 000
Reactors	4 025 000
Pressure filter	1 230 000
Decrystallization units	190 000
Solid/liquid separators	287 000
Utilities	1 342 000
Storage	425 000
Total equipment cost	60 340 000

Table 2. Operating costs (capacity: 80 000 dry tons of biomass per year).

Operating costs	Cost ($/yr)
Ionic liquid	245 916 000
Biomass feedstock	6 574 000
Other raw material	3 970 000
Operating labor	2 674 000
Maintenance and repairs	1 678 000
Insurance	1 258 000
Plant overhead	1 604 000
Waste disposal	431 000
Total operating cost	264 105 000

A breakdown of the operating costs is given in Table 2. The cost of fresh IL ($246 million) is the major contributor to the total operating cost ($264 million). Approximately, 3.1 tons/h of [EMIM]Cl is continuously supplied into the process to maintain the IL to biomass ratio at 10:1 in both hydrolysis reactors. Biomass feedstock cost is more than $6.5 million/yr, assuming that the corn stover feedstock price is $83/ton.[52] The total cost of other raw materials is around $4 million annually, including HCl and process water, based on 2011 prices.[53] Fixed operating cost including operating labor, maintenance, insurance and plant overhead cost adds $7.2 million to the annual operating costs.

Contributions of the operating costs, income tax and return on investment (ROI) to the minimum selling price (MSP) are shown in Fig. 4. ROI, which is a function of the discount rate and the equipment life span, represents the

 © 2012 Society of Chemical Industry and John Wiley & Sons, Ltd | *Biofuels, Bioprod. Bioref.* **6**:444–452 (2012); DOI: 10.1002/bbb

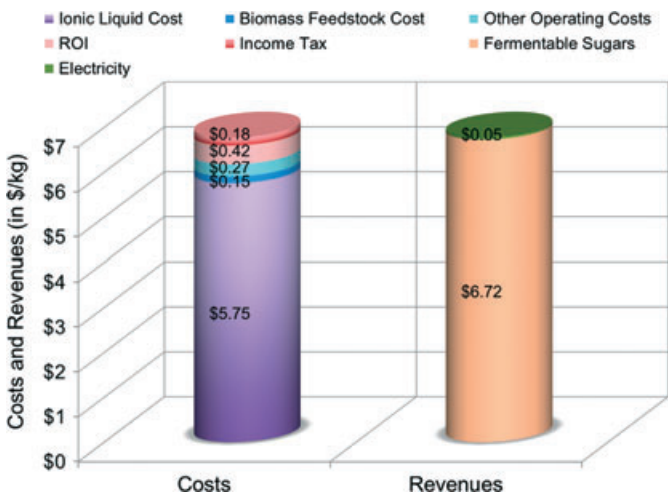

Figure 4. Cost and revenue components.

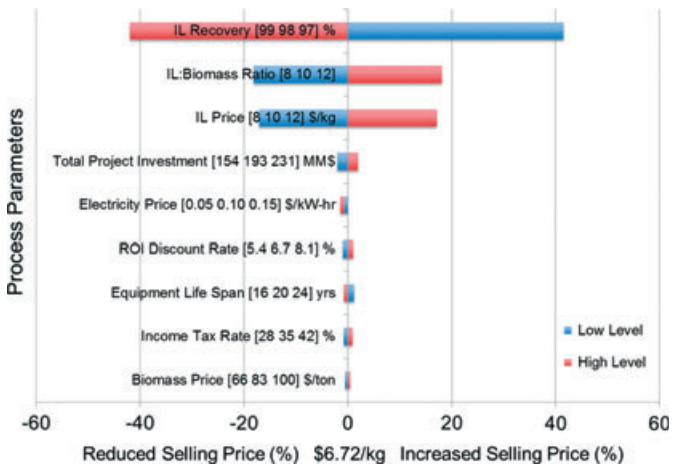

Figure 5. Sensitivity analysis results. IL recovery rate, IL:biomass ratio, and IL price, are identified as the most important parameters.

contribution of the capital expenditures to the MSP. Income tax is calculated based on the difference of the revenues and costs by considering the depreciation of the unit equipments. The break-even point is determined by adjusting the MSP of the fermentable sugars so that revenues (from sugars and excess electricity) are equal to the production cost plus taxes plus ROI. At the break-even point, the MSP of the fermentable sugar product is equal to $6.72/kg, which is significantly higher than the current market price of sugars (45–80¢/kg).[54] We observe that the dominant component is the IL cost, which is $5.75/kg. All remaining cost contributors add $1.02 to each kg of the fermentable sugar product. Revenue from the electricity is valued at $0.05/kg assuming that excess electricity is sold at 5¢/kW-h.

Sensitivity analysis

The results of our economic evaluation suggest that further technology and process improvements are critical to reduce the cost of this strategy. To identify the major cost drivers and technology gaps, we carried out sensitivity analysis studies with respect to a series of technical (e.g. IL recovery rate and IL:biomass ratio) and economic (e.g. IL price, tax rate, ROI discount rate) parameters. The results are shown in Fig. 5.

We observe that the most important parameter is the IL recovery rate: a ±1% perturbation leads to a 42% change in the MSP of fermentable sugars. The IL:biomass ratio has the second-greatest effect: a 20% decrease in the IL:biomass ratio results in around 18% reduction in the MSP of sugars, assuming that sugar yields in the two hydrolysis steps remain the same. The price of IL has a similar effect: a ±20% variation in the IL price changes the MSP by more than 17%. A ±20% variation in the total project investment changes the MSP by 2%. Variations of ±20% in the biomass feedstock cost, ROI discount rate, income tax rate, and equipment life span result in less than 1% change in the MSP of sugars. Finally, we investigated how electricity price changes the economics. In our baseline system, electricity selling price was assumed to be 5¢/kW-h. Electricity obtained from renewable sources can, however, be sold at higher rates due to incentives. Our sensitivity analysis showed that every 5¢/kW-h increase in electricity price leads to a 0.7% reduction in the MSP.

Clearly, the major economic driver is the cost of fresh IL, which depends on (i) the amount of fresh IL supplied into the process, and (ii) the price of IL. Importantly, the former depends on the IL:biomass ratio in the hydrolysis reactors, which can be improved via new catalytic technology development, and the IL recovery rate, which can be improved via separation technology advances. To evaluate the potential effect of new conversion and separation technologies, we investigated how combined changes in the two aforementioned parameters affect the MSP. The IL recovery rate was varied from 95% to 99%, whereas the IL:biomass ratio was varied from 10:1 to 5:1 assuming that sugar yields remain the same. This resulted in a fresh IL consumption

© 2012 Society of Chemical Industry and John Wiley & Sons, Ltd

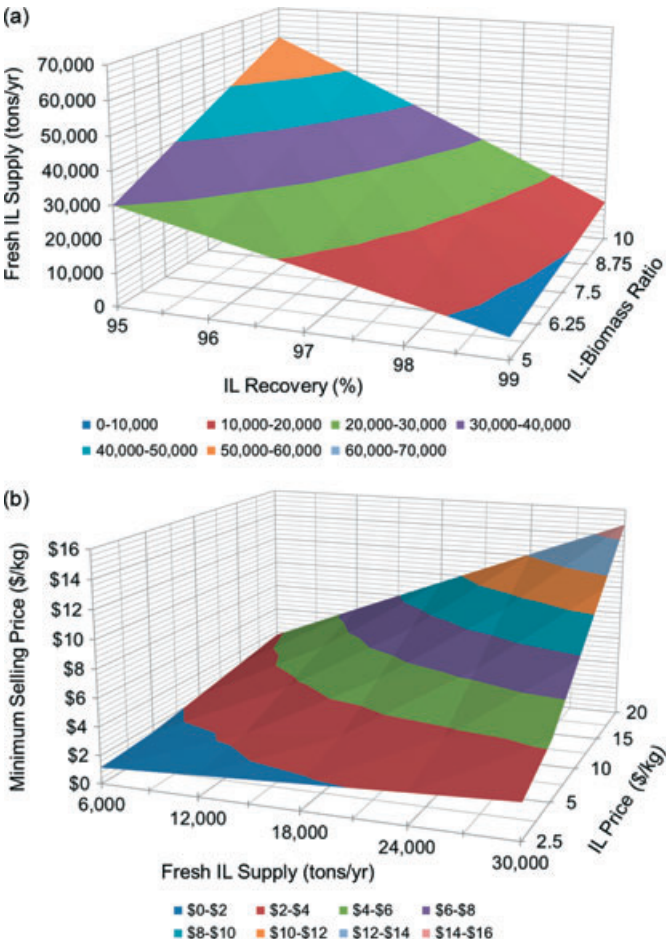

Figure 6. [a] Sensitivity of fresh IL supply with respect to IL:biomass ratio and IL recovery rate. [b] MSP as a function of IL price and fresh IL supply.

of between 6000 and 60 000 tons/yr as shown in Fig. 6(a). Our analysis suggests that combined improvements in catalytic and separation technologies can reduce the consumption of IL from 24 600 tons/yr in the baseline design to 6000 tons/yr.

The second driver, the price of IL, is expected to decrease if IL-based biomass hydrolysis is widely adopted, thus leading to economies of scale due to large-scale production. Furthermore, ILs are currently used in applications where high purity is required, which in turn leads to high prices ($20–100/kg), but high purity IL may not be necessary in this application. To investigate the effect of IL price, we considered scenarios where the price ranges from $2.5/kg (roughly the cost of raw materials for 1 kg of [EMIM]Cl)[55] to $20/kg. The combined effect of the supply of fresh IL and the price of IL on the MSP of sugars is shown in Fig. 6(b). The lowest MSP is $1.14/kg.

Discussion

The cost of ILs appears to be the major barrier for the implementation of the process discussed in this paper. Therefore, process configurations that require lower IL consumption should be investigated. One option is the replacement of the first IL-based hydrolysis step with dilute acid hydrolysis. This configuration would require minor changes and would preserve the high sugar yield because the IL is used to hydrolyze recalcitrant cellulose in the second hydrolysis step. Since the amount of biomass in the second step is substantially lower, this change can potentially result in a 50% reduction in the required IL. Integration with other pre-treatment technologies can also be investigated, though it is not clear if intermediate steps (e.g. neutralization) would be necessary. A second option is the elimination of one hydrolysis step coupled with introduction of a cellulose solids recycle stream. This configuration would require additional separation units, but it can be effective if unreacted cellulose is recovered effectively. Another direction is the development of a better strategy for the separation of ILs from the biomass hydrolyzate. SMB technology can be fine-tuned to this specific hydrolyzate mixture, thus leading to high recovery (>99%). Vastly different technologies could, however, replace or be integrated with an SMB system, perhaps including extraction procedures that leverage the unique physical properties of the ionic liquid. Finally, the replacement of [EMIM]Cl by other ILs which lend themselves to conventional separations (e.g., distillation and extraction) can lead to significant savings.[56] The goal here would be the development of a hydrolysis technology that has similarly high sugar yields while employing ILs with physical properties sufficiently different from those of sugar monomers using reliable property estimation models.[57]

Acknowledgments

This work was supported by the Department of Energy through the Great Lakes Bioenergy Research Center, the Wisconsin Alumni Research Foundation, and the University of Wisconsin – Madison BACTER Institute through grant DE-FG02-04ER25627.

 © 2012 Society of Chemical Industry and John Wiley & Sons, Ltd

References

1. Blaschek HP and Ezeji TC, Science of alternative feedstock, in *Corn-based Ethanol in Illinois and the US.* Department of Agricultural and Consumer Economics, University of Illinois, pp. 112–128 (2007).
2. Clark JH, Green chemistry for the second generation biorefinery—sustainable chemical manufacturing based on biomass. *J Chem Technol Biot* **82**:603–609 (2007).
3. Serrano-Ruiz JC, West RM and Dumesic JA, Catalytic conversion of renewable biomass resources to fuels and chemicals. *Annu Rev Chem Biomol Eng* **1**:79–100 (2010).
4. Tan SYT and MacFarlane DR, Ionic liquids in biomass processing. *Top Curr Chem* **290**:311–339 (2009).
5. Huber GW and Dale B, The fuel of the future is grassoline. *Sci Am* **301**:52–53 (2009).
6. NSF. *Breaking the Chemical and Engineering Barriers to Lignocellulosic Biofuels: Next Generation Hydrocarbon Biorefineries.* Ed. George W. Huber, University of Massachusetts Amherst. National Science Foundation. Chemical, Bioengineering, Environmental, and Transport Systems Division. Washington D.C. (2008).
7. Blanch HW and Wilke CR, Sugars and chemicals from cellulose. *Rev Chem Eng* **1**:71–119 (1982).
8. Cardona CA and Sanchez OJ, Fuel ethanol production: Process design trends and integration opportunities. *Bioresource Technol* **98**:2415–2457 (2007).
9. Ungurean M, Fitigau F, Paul C, Ursoiu A and Peter F, Ionic liquid pretreatment and enzymatic hydrolysis of wood biomass. *WASET* **76**:387–391 (2011).
10. Wang Q, Wu Y and Zhu S, Use of ionic liquids for improvement of cellulosic ethanol production. *Bioresources* **6**:1–2 (2011).
11. Grohmann K, Torget R and Himmel M, Dilute acid pretreatment of biomass at high solids concentrations. *Biotechnol Bioeng Symp* **15**:59–80 (1985).
12. Lloyd TA and Wyman CE, Combined sugar yields for dilute sulfuric acid pretreatment of corn stover followed by enzymatic hydrolysis of the remaining solids. *Bioresource Technol* **96**:1967–1977 (2005).
13. Schell D, Farmer J, Newman M and McMillan J, Dilute-sulfuric acid pretreatment of corn stover in pilot-scale reactor. *Appl Biochem Biotech* **105**:69–85 (2003).
14. Chang VS, Burr B and Holtzapple MT, Lime pretreatment of switchgrass. *Appl Biochem Biotech* **63/65**:3–19 (1997).
15. Kim S and Holtzapple MT, Lime pretreatment and enzymatic hydrolysis of corn stover. *Bioresource Technol* **96**:1994–2006 (2005).
16. Sierra R, Granda C and Holtzapple MT, Short-term lime pretreatment of poplar wood. *Biotechnol Prog* **25**:323–332 (2009).
17. Bobleter O, Niesner R and Rohr M, Hydrothermal degradation of cellulosic matter to sugars and their fermentative conversion to protein. *J Appl Polym Sci* **20**:2083–2093 (1976).
18. Liu CG and Wyman CE, Impact of fluid velocity on hot water only pretreatment of corn stover in a flow through reactor. *Appl Biochem Biotech* **113/116**:977–987 (2004).
19. Mosier N, Wyman C, Dale B, Elander R, Lee YY, Holtzapple M and Ladisch M, Features of promising technologies for pretreatment of lignocellulosic biomass. *Bioresource Technol* **96**:673–686 (2005).
20. Dale BE and Moreira MJ, A freeze-explosion technique for increasing cellulose hydrolysis. *Bi*solvent for cellulose. *Macromolecules* **38**:8272–8277 (2005).
21. Teymouri F, Laureano-Perez L, Alizadeh H and Dale BE, Optimization of the ammonia fiber explosion (AFEX) treatment parameters for enzymatic hydrolysis of corn stover. *Bioresour Technol* **96**:2014 – 2018 (2005).
22. Lau MW, Dale BE and Balan V, Ethanolic fermentation of hydrolysates from ammonia fiber expansion (AFEX) treated corn stover and distillers grain without detoxification and external nutrient supplementation. *Biotechnol Bioeng* **99**:529–539 (2008).
23. Swatloski RP, Spear SK, Holbrey JD and Rogers RD, Dissolution of cellulose with ionic liquids. *J Am Chem Soc* **124**:4974–4975 (2002).
24. Zhang H, Wu J, Zhang J and He JS, 1-Allyl-3-methylimidazolium chloride room temperature ionic liquid: A new and powerful nonderivatizing solvent for cellulose. *Macromolecules* **38**:8272–8277 (2005).
25. Liu LY and Chen HZ, Enzymatic hydrolysis of cellulose materials treated with ionic liquid [BMIM]Cl. *Chinese Sci Bull* **51**:2432–2436 (2006).
26. Kamiya N, Matsushita Y, Hanaki M, Nakashima K, Narita M, Goto M and Takahashi H, Enzymatic in situ saccharification of cellulose in aqueous–ionic liquid media. *Biotechnol Lett* **30**:1037–1040 (2008).
27. Dadi AP, Varanasi S and Schall CA, Enhancement of cellulose saccharification kinetics using an ionic liquid pretreatment step. *Biotechnol Bioeng* **95**:904–910 (2006).
28. Lee SH, Doherty TV, Linhardt RJ and Dordick JS, Ionic liquid-mediated selective extraction of lignin from wood leading to enhanced enzymatic cellulose hydrolysis. *Biotechnol Bioeng* **102**:1368–1376 (2009).
29. Bose S, Armstrong DW and Petrich JW, Enzyme-catalyzed hydrolysis of cellulose in ionic liquids: A Green approach toward the production of biofuels. *J Phys Chem B* **114**:8221–8227 (2010).
30. Zhao H, Jones CL, Baker GA, Xia S, Olubajo O and Person VN, Regenerating cellulose from ionic liquids for an accelerated enzymatic hydrolysis. *J Biotechnol* **139**:47–54 (2009).
31. Wang Y, Radosevich M, Hayes D and Labbe N, Compatible ionic liquid-cellulases system for hydrolysis of lignocellulosic biomass. *Biotechnol Bioeng* **108**:1042–1048 (2011).
32. Zheng Y, Pan Z and Zhang R, Overview of biomass pretreatment for cellulosic ethanol production. *Int J Agric Biol Eng* **2**:51–68 (2009).
33. Su Y, Brown HM, Huang X, Zhou X, Amonette JE and Zhang ZC, Single-step conversion of cellulose to 5-hydroxymethylfurfural (HMF), a versatile platform chemical. *Appl Catal A* **361**:117–122 (2009).
34. Simmons BA, Singh S, Holmes BM and Blanch HW, Ionic liquid pretreatment. *Chem Eng Prog* **106**:50–55 (2010).
35. Li C, Knierim B, Manisseri C, Arora R, Scheller HV, Auer M *et al.,* Comparison of dilute acid and ionic liquid pretreatment of switchgrass: Biomass recalcitrance, delignification and enzymatic saccharification. *Bioresource Technol* **101**:4900–4906 (2010).
36. Shill K, Padmanabhan S, Xin Q, Prausnitz JM, Clark DS and Blanch HW, Ionic liquid pretreatment of cellulosic biomass: Enzymatic hydrolysis and ionic liquid recycle. *Biotechnol Bioeng* **108**:511–520 (2011).
37. Binder JB and Raines RT, Fermentable sugars by chemical hydrolysis of biomass. *P Natl Acad Sci USA* **107**:4516–4521 (2010).
38. Raines RT and Binder JB, Biomass hydrolysis. US Patent Application: 20110065159 (2011).
39. Dee S and Bell AT, Effects of reaction conditions on the acid-catalyzed hydrolysis of miscanthus dissolved in an ionic liquid. *Green Chem* **13**:1467–1475 (2011).

© 2012 Society of Chemical Industry and John Wiley & Sons, Ltd

40. Li C and Zhao ZK, Efficient acid-catalyzed hydrolysis of cellulose in ionic liquid. *Adv Synth Catal* **349**:1847–1850 (2007).
41. Binder JB and Raines RT, Simple chemical transformation of lignocellulosic biomass into furans for fuels and chemical. *J Am Chem Soc* **131**:1979–1985 (2009).
42. Binder JB, Blank JJ, Cefali AV and Raines RT, Synthesis of furfural from xylose and xylan. *ChemSusChem* **3**:1268–1272 (2010).
43. Sievers C, Valenzuela-Olarte MB, Marzialetti T, Musin I, Agrawal PK and Jones CW, Ionic-liquid–phase hydrolysis of pine wood. *Ind Eng Chem Res* **48**:1277–1286 (2009).
44. Earle MJ, Esperanca JMSS, Gilea MA, Lopes JNC, Rebelo LPN, Magee JW *et al.,* The distillation and volatility of ionic liquids. *Nature* **439**:831–834 (2006).
45. Wooley R, Ma Z and Wang NHL, A nine-zone simulating moving bed for the recovery of glucose and xylose from biomass hydrolyzate. *Ind Eng Chem Res* **37**:3699–3709 (1998).
46. Xie Y, Chin CY, Phelps DSC, Lee CH, Lee KB, Mun S and Wang NHL, A five-zone simulated moving bed for the isolation of six sugars from biomass hydrolyzate. *Ind Eng Chem Res* **44**:9904–9920 (2005).
47. Liu W, *A Novel Ionic Liquid Process for Conversion of Renewable Biomass into Petrochemical Intermediate.* 13th Annual Green Chemistry & Engineering Conference, 25 June 2009, College Park, MD (2009).
48. Aden A, Ruth M, Ibsen K, Jechura J, Neeves K, Sheehan J *et al., Lignocellulosic biomass to ethanol process design and economics utilizing co-current dilute acid prehydrolysis and enzymatic hydrolysis for corn stover*, NREL/TP-510-32438. National Renewable Energy Laboratory, Golden, CA (2002).
49. [Online]. Available at: http://home.fuse.net/clymer/rq/index.html 9 [October 26, 2011].
50. Sinnott RK, *Chemical Engineering Design,* 4th Edition. Elsevier, Butterworth-Heinemann, Burlington, MA, pp. 243–279 (2005).
51. Highbeam Business. [Online]. Available at: http://business.highbeam.com/408261/article-1G1-257138813/chemical-engineering-plant-cost-index [October 26, 2011].
52. Kazi FK, Fortman JA, Anex RP, Hsu DD, Aden A, Dutta A and Kothandaraman G, Techno-economic comparison of process technologies for biochemical ethanol production from corn stover. *Fuel* **89**:S20–S28 (2010).
53. ICIS. Indicative chemical prices. [Online]. Available at: http://www.icis.com/StaticPages/f-j.htm#H [October 26, 2011].
54. United States Department of Agriculture (USDA), *World and U.S. Sugar and Corn Sweetener Prices*. [Online]. (2011) Available at: http://www.ers.usda.gov/Briefing/Sugar/Data.htm [October 26, 2011].
55. Reddy RG, Ionic liquids: How well do we know them? *J Phase Equilib Diffus* **27**:210–211 (2006).
56. Caes BR, Binder JB, Blank JJ and Raines RT, Separable fluorous ionic liquids for the dissolution and saccharification of cellulose. *Green Chem* **13**:2719–2722 (2011).
57. Gani R, Chemical product design: challenges and opportunities. *Comput Chem Eng* **28**:2441–2457 (2004).

Sercan Murat Sen

Sercan Murat Sen is a PhD candidate in the Chemical and Biological Engineering Department at the University of Wisconsin–Madison, working in the area of process synthesis for biofuels. He received his Bachelor's and Master's Degree in Chemical Engineering from Bogazici University, Turkey.

Joe Binder

Joe Binder is a research chemist with BP Biofuels and the Energy Biosciences Institute at the University of California, Berkeley. He received his PhD in organic chemistry from the University of Wisconsin–Madison, and his current research focuses on the chemical composition and processability of energy crops.

Ron Raines

Ron Raines is the Henry Lardy Professor of Biochemistry and a Professor of Chemistry at the University of Wisconsin–Madison. His research is focused on biofuels, as well as on the chemistry and biology of proteins.

Christos T. Maravelias

Christos Maravelias is an Associate Professor in the Department of Chemical and Biological Engineering at the University of Wisconsin–Madison. His main research interests are in the areas of chemical production planning and scheduling, chemical process synthesis, and renewable fuel technology assessment.

 © 2012 Society of Chemical Industry and John Wiley & Sons, Ltd